Installation Sheet

KSRFRD366

Triple Auto CCT Changeable Downlight

Qr10 10W COB

Read these instructions before commencing installation & retain them for future reference.

Available Rim Finishes: White, Chrome, Satin Chrome, Brass, Antique Brass & Black

IP65 240V 10W

Part "B"
BS476
Part 21

Part "E"
(Acoustics)

Part "C"
Compliant
Stops moisture & air flow through the luminaire

Luminaire suitable for all timber joist ceiling variants covering 30,60 & 90 minutes.
Approved to:- **BS476 Part 21**
Building Regulations Document B2 determines the ceiling type that is required depending on the type of building under construction. The ceiling types are designed to provide protection to the floor above in the case of fire for a duration as specified by the document. Using KSR's Fire-Rated downlights ensures that this specification is maintained even when downlights are installed in the ceiling.

Important Information

It is recommended that luminaires are installed by a qualified electrician ensuring the installation complies to current IEE wiring regulations & local building control.
These products are designed for connection to a 230-240V mains supply.
Any broken or damaged parts should be replaced as soon as possible.
KSR will not accept responsibility for any claims arising from a poor installation.

Important User Advice

Always switch off mains supply before servicing.
This luminaire is suitable for indoor use only and should not be fitted to damp or wet surfaces such as freshly plastered or painted walls.

Installation Procedure

KSR recommends that a sample hole is cut in some scrap material to familiarise yourself with the installation. Once you are completely satisfied:
Locate the area's suitable to install these luminaires.
Cut a 72mm round hole in the ceiling and ensure sufficient ceiling void without infringing on joists, water pipes or electrical cables.
Connect the mains supply to the LED Driver (Blue - Neutral, Brown - Live). Earth terminals are provided for earth continuity only. Press into place the strain relief pushing down until it grips the outer cable insulation. Install the terminal cover.
The LED driver allows for mains loop in/loop out connections, if not looping through either of the L,E & N inputs can be used.
Press springs back and push luminaire body into aperture.
If you are installing one of the KSR detachable rims remove the standard white rim by pulling the trim off of the main fitting, do not twist the trim. Attach new trim by pushing and snapping it into place.
Turn on the power and test the luminaire. Select the preferred colour temperature following the guide "Setting the colour temperature" on this page.

This downlight can be covered with mineral wool insulation, however the driver should remain in free air space to avoid overheating.
*Please note: Depending on the amount of Qr10 fittings on a circuit you may have to upgrade the breaker to a 'C' or 'D' type due to the way electronic LED drivers start up with higher inrush currents compared to halogen lighting. If dimming see the recommended dimmers list over the page or visit www.ksrlighting.com for information on the latest compatible dimmers any other questions please call our sales office on 023 92 674343.

Fig. I

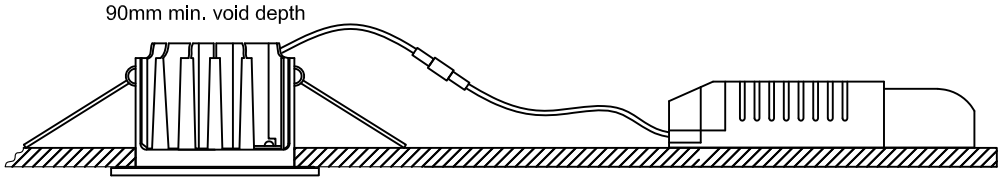

Setting the colour temperature:

To change the colour temperature turn the wall switch/dimmer off then on within 3 seconds. The colour temperature will switch between 3000k, 4000k, 6000k then back to 3000k with each switch.

Once the preferred temperature has been found, leave the light 'on' for 10 seconds to set the memory. The lights are now set for normal use.

To reset the lights to 3000k with them turned off switch the wall switch or dimmer on for between 5 to 10 seconds then turn off.
This saves having to cycle though all colour temperatures or if the luminaires are out of sync. Repeat above to select new colour temperature.

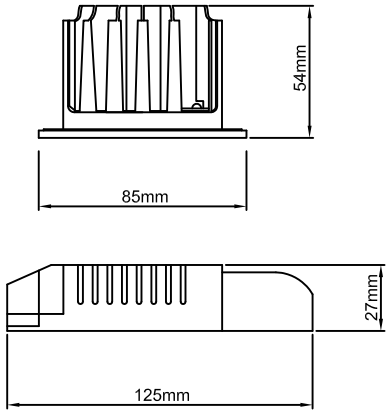

Installer Note:

To ensure a good connection strip back a minimum if 10mm insulation and push the cable firmly into the terminal block.

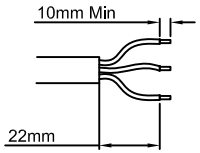

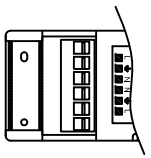

CCT Selection	Lumen Performance
WW - 3000k	655 Lumens
NW - 4000k	736 Lumens
CW - 6000k	648 Lumens

ØRIm SIze	ØCut out	Vold Depth Req'd	Max per circuit
85mm	72mm +/- 2mm	90mm	20

KSR Lighting Aftersales: 023 92 674343
E-mail: info@ksr-lighting.co.uk