# Starlet Select Backlit Panel

*Commercial Lighting*

Data Sheet

## Product Information

The Starlet Select Backlit Panel design makes it ideal for commercial applications and this incorporated with its high quality TP(a) rated diffuser, the panel can be used throughout the install without restriction. Along with the convenience of being able to switch between 3000K, 4000K or 6000K and the luminaire output on site making it a very versatile panel.

The panel construction also helps lighting designers achieve UGR19 compliant schemes.

Comes with a 3 year warranty for peace of mind.

## Product Features

- 3 year warranty
- Class II
- IP40 (from the front when installed)
- Switchable in 3000K, 4000K and 6000K colour temperatures
- Switchable output – 25/36w for KSR98150/98151 and 40/58w for the KSR98152
- Slim design 33mm Depth
- TP(a) Diffuser as standard
- Plug & Play Driver
- Suitable for T Grid, Surface and Suspended Ceilings
- Part L compliant
- Helps to achieve UGR19 compliant lighting designs
- Self test Emergency options Available
- L70 – 40,000hrs

# Product Specification

| Product Code | Product Description | Wattage (W) | CCT (K) | Lumens (lm) | CRI (Ra) | 2021 Energy Efficiency Class | Protection Class | Circuit Current | Driver Current |
|---|---|---|---|---|---|---|---|---|---|
| KSR98150 | Starlet Multi-wattage 3CCT LED 600x600 Backlit TPa Panel | 25 | 3000 | 2480 | 84 | E | II | 0.11 | 600mA |
| | | | 4000 | 2590 | 84 | E | | | |
| | | | 6000 | 2415 | 84 | E | | | |
| | | 36 | 3000 | 3430 | 84 | E | II | 0.15 | 850mA |
| | | | 4000 | 3610 | 84 | E | | | |
| | | | 6000 | 3400 | 84 | E | | | |
| KSR98151 | Starlet Multi-wattage 3CCT LED 300x1200 Backlit TPa Panel | 25 | 3000 | 2450 | 84 | E | II | 0.11 | 600mA |
| | | | 4000 | 2620 | 84 | E | | | |
| | | | 6000 | 2385 | 84 | E | | | |
| | | 36 | 3000 | 3420 | 84 | E | II | 0.15 | 850mA |
| | | | 4000 | 3635 | 84 | E | | | |
| | | | 6000 | 3400 | 84 | E | | | |
| KSR98152 | Starlet Multi-wattage 3CCT LED 1200x600 Backlit TPa Panel | 40 | 3000 | 3380 | 84 | F | II | **TBC** | **TBC** |
| | | | 4000 | 3570 | 84 | F | | | |
| | | | 6000 | 3330 | 84 | F | | | |
| | | 58 | 3000 | 5755 | 84 | F | II | **TBC** | **TBC** |
| | | | 4000 | 5840 | 84 | F | | | |
| | | | 6000 | 5615 | 84 | F | | | |
| **Optional Accessories:** | | | | | | | | | |
| KSR9853 | Starlet 600mm x 600mm x 85mm Surface Frame | | | | | | | | |
| KSR9854 | Starlet 1200mm x 300mm x 85mm Surface Frame | | | | | | | | |
| KSR9855 | Starlet 1200mm x 600mm x 85mm Surface Frame | | | | | | | | |

***For emergency options add EM after the part number**

****dimming options TBC**

| Technical Data | 600x600 LED Panel | 300x1200 LED Panel | 600x1200mm LED Panel |
|---|---|---|---|
| **Nominal voltage** | 200~240VAC | 200~240VAC | 200~240VAC |
| **Operating frequency** | 50/60Hz | 50/60Hz | 50/60Hz |
| **Circuit Wattage** | 23.61w inc. driver losses | 23.61w inc. driver losses | **TBC** |
| | 33.79w inc. driver losses | 33.79w inc. driver losses | **TBC** |
| **Circuit Current** | See Table Above | See Table Above | See Table Above |
| **Driver Current Rating** | See Table Above | See Table Above | See Table Above |
| **PFC** | 0.92 | 0.92 | 0.9 |
| | 0.95 | 0.95 | |
| **In Rush Current** | 12.3A Max peak @ 40ms | 12.3A Max peak @ 40ms | **TBC** |
| **Start Time** | < 0.5 Sec | < 0.5 Sec | < 0.5 Sec |
| **Ambient temperature range** | -5°c to +40°c | -5°c to +40°c | -5°c to +40°c |

# Construction

| | |
|---|---|
| Rim: | Aluminium |
| Diffuser: | Polycarbonate TP(a) rated |

# Standards

| | |
|---|---|
| BSEN60598-1:2021 | Luminaires – Part 1: General Requirements and tests |
| BSEN60598-2-22:2014+A1 2020 | Luminaires – Part 2: Luminaires emergency lighting |

# In Conformity with

| | |
|---|---|
| LVD | Low voltage directive 2014/35/EU |
| EMC | Electromagnetic compatibility directive 2014/30/EU |
| ERP | Energy related products directive 2019/2020/EU |
| RoHS | Restriction of hazardous substances 2015/863/EU |

# Product Dimensions

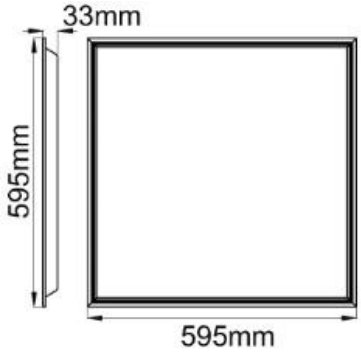


KSR98150

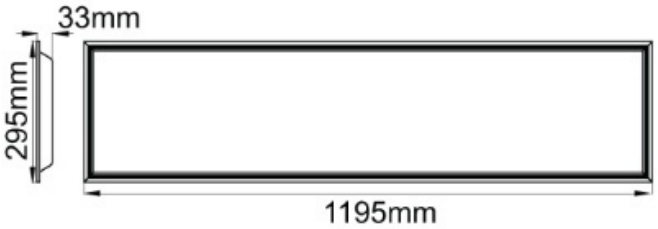


KSR98151

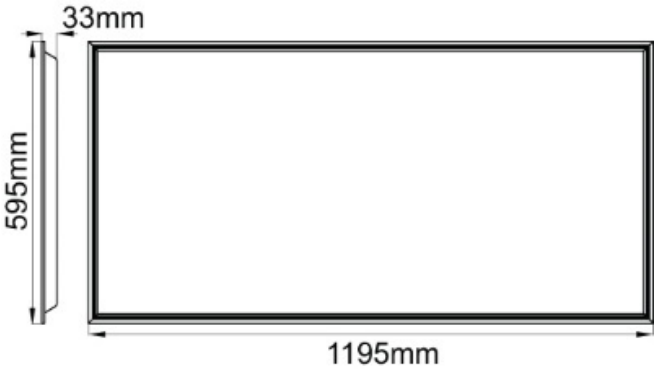


KSR98152